UNIT-4
Hard disk& I/O Devices

❖ Hard Disk introduction and characteristics

- Hard Disk Drive(HDD) is a device that stores data
- The Magnetic storage hard disk is based on 40 year old technology and still is being improved rapidly
- Hard disk continue to shrink in size, gain increased storage capacity and increased transfer speed
- The first hard disk was introduced in 1957 by IBM before that data were stored in taps
- In early year of PC development the low cost floppy drives were preferred as storage media but with IBM's PC-XT in 1983-84 the hard disk became preferred medium
- Hard disk consist of one or more magnetic disks contained in a box used as storage media in the PC, where you store program and other digital data
- A hard disk contains one or more inflexible, circular platters that use magnetic particles to store data, instructions, and information

❖ Hard Disk Interfaces:

- Hard disk interface is the connecting part between the hard disk and the host computer system
- Its function is to transmit data between the hard disk and the computer

There are various type of HDD interfaces which are

1) SCSI(Small Computer System Interface)
2) IDE(Integrated Drive Electronics)
3) SATA(Serial Advance Technology Attachment)
4) RAID(Redundant Array of Independent Drives)
5) USB(Universal Serial Bus)

VPMP POLYTECHNIC

1) SCSI(Small Computer System Interface)

- Pronounced Scuzzy
- Small Computer Systems Interface
- For wide range of peripheral devices, including′ hard disks, tape drives, optical drives, CDROMs and disk arrays.
- 8 devices can connect to a daisy chain
- This chain must be terminated at both ends
- Each device on chain is assigned unique device ID number that is determined by jumpers or DIP switches

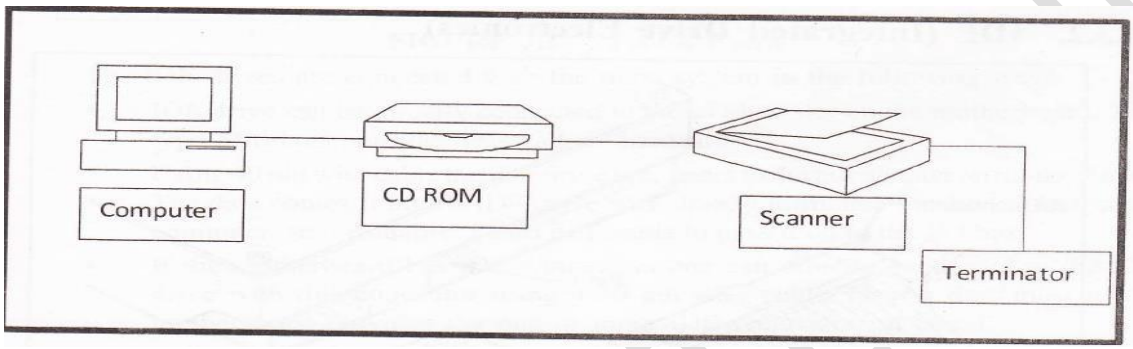

Fig. SCSI daisy chain connection

2) IDE(Integrated Drive Electronics)

- One of the biggest problems with the 5T-506/4i2 interface was its controller was away from the drive.
- Originally developed as alternative to more expensive SCSI drives.
- Modern versions called EIDE drives.
- Support up to 4 multi gigabyte drives.
- If you want more devices, use SCSI or USB
- Low-level formatted at the factory
- As the distance between the controller and the drive increased, there may be chance of data lost. They integrated the controller in drive itself .which called the IDE. These types of drives are also known **Parallel Advanced Technology Attachment (PATA).**
- This led to removing the need for long cables to connect the controller with drive. IDE make the system more reliable, low cost and also allow putting 30 or more sectors per track on these drives.

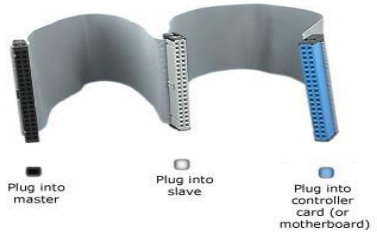

The IDE drives are connected with the main system in the following ways:

- IDE drive can be directly connected to the I/O bus slot on the motherboard. This type of drive/controller was called **"Hardcard"**.
- Using 40 pin wire cable the IDE drive is connect to the bus adapter on motherboard. The data comes

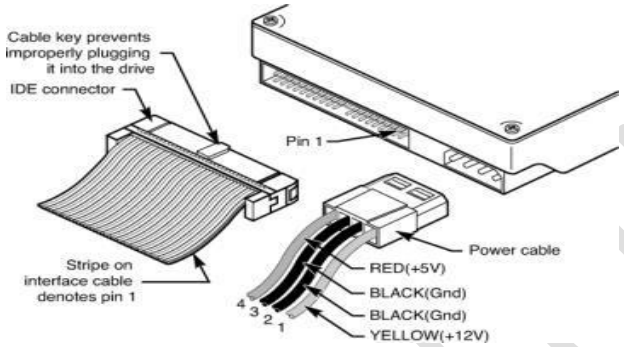

from the IDE drive was already formatted for the I/O bus of the computer, so the adapter board just needs to pass it on to the IO bus.

- If the motherboard has IDE connectors one can directly connected to the IDE drive with this connector using a 40 pin wire cable. Now a day, most of the motherboard provides the one or more IDE connector on board.
  - Based on type of the system bus. there are four type of IDE:
  - ATA IDE (AT Attachment IDE)
  - XTA IDE
  - MCA IDE
  - EIDE

3) SATA(Serial Advance Technology Attachment)
   - A serial version of the ATA (IDE) interface, which has been the de facto standard hard diskinterface for desktop PCs for more than two decades.
   - SATA was introduced in 2002 at significantly higher speed, transferring data in eachdirection at 1.5 Gbps. A year later, SATA II increased speed to 3 Gbps.
   - SATA provides a point-to-point channel between motherboard and drive rather than themaster-slave architecture in the parallel technology.
   - SATA uses a four-wire shielded cable up to one meter in length compared to the wide flat 18" PATA (Parallel ATA) cables. SATA cables as shown in following figure connectors are considerably smaller than their PATA and take up a lot less space in the case.

VPMP POLYTECHNIC

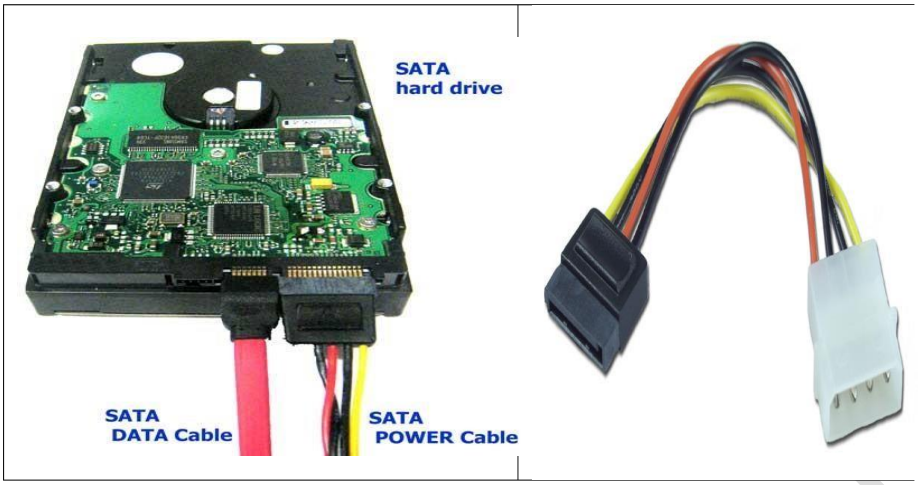

4) RAID(Redundant Array of Independent Drives)
   - Redundant Array of Independent Drives (or Disks) also known as Redundant Array of Inexpensive Drives (or Disks).
   - RAID offers different schemes for increased data reliability and/or I/O performance.
   - Most schemes are numbered and referred to as levels. RAID began as a collection of such five levels.
   - **RAID Basic Functions**
   - Fundamentally, RAID combines multiple hard disks into a single logical unit. There are two ways this can be done: in hardware and in software.
   - Hardware combines the drives into a logical unit in dedicated hardware which then presents the drives as a single drive to the operating system.
   - Software does this within the operating system and presents the drives as a single drive to the users of the system.
   - RAID levels-

- RAID 0: Striped Set (2 disks minimum) without parity.
- RAID 1: Mirrored Set (2 disks minimum) without parity.
- RAID 3 and RAID 4: Striped Set (3 disk minimum) with Dedicated parity
- RAID 5: Striped Set (3 disk minimum) with Distributed Parity.
- RAID 6: Striped Set (4 disk minimum) with Dual Distributed Parity.

<u>RAID 0 – Striping</u>

- Two or more drives
- Writes alternate between drives for speed
- Both drives get same drive letter from system
- Fast but not safe; one failure and all fails

VPMP POLYTECHNIC

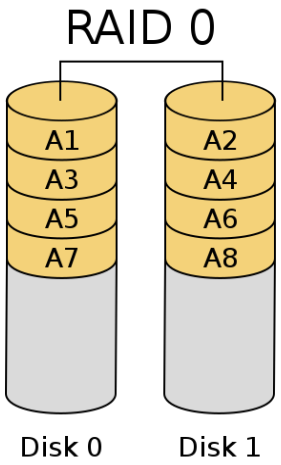

RAID 1: Mirroring

- Two drives, one controller
- same drive letter
- writes are to both drives
- Safe, one drive can fail, but slow

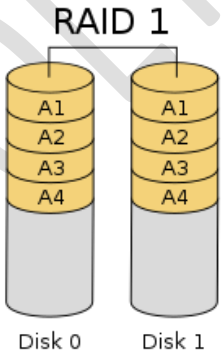

RAID 1+0(Data is mirrored and stripped)

- Nested RAID
- It is the combination of RAID 0 and RAID 1 so it improves performance and security both
- Real time application: web server and email server

VPMP POLYTECHNIC

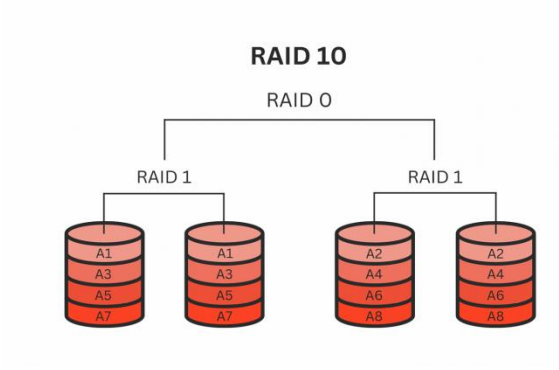

RAID 3 and RAID 4:

- In this data is break into block level
- Parity of data is placed in different disk so if one of the disk is failed still we can recover data from parity
- But the disadvantage is if disk of parity is failed then all parities will not able to get use

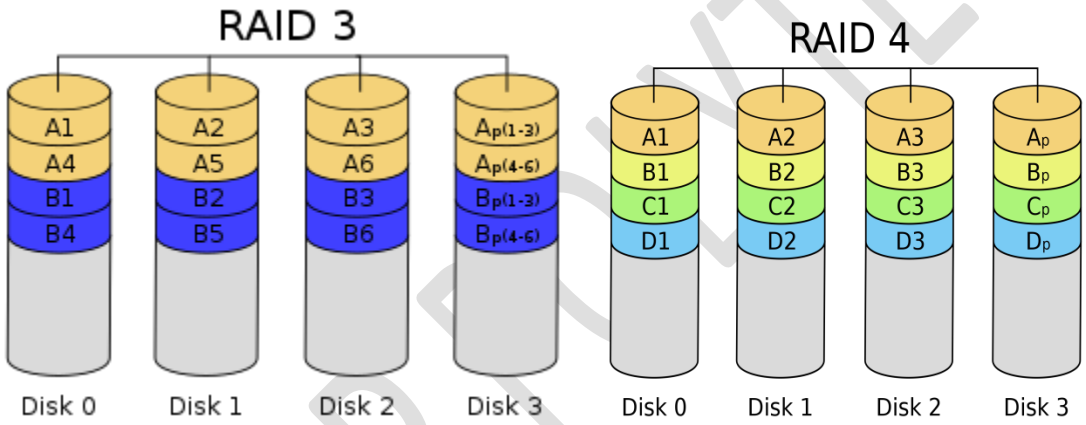

RAID 5: Striping with Parity

- RAID 3 and RAID 4 problem is solved in RAID 5
- Here parities are distributed in all disks ao any disk will not be over utilized all disks will be utilized equally

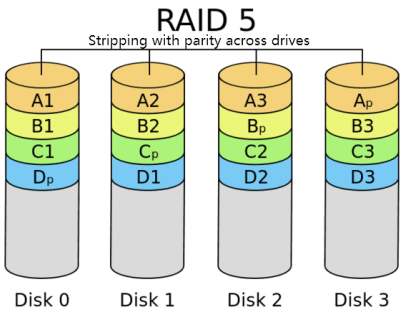

VPMP POLYTECHNIC

RAID 6:

- In this we calculate 2 parities instead of 1 parity

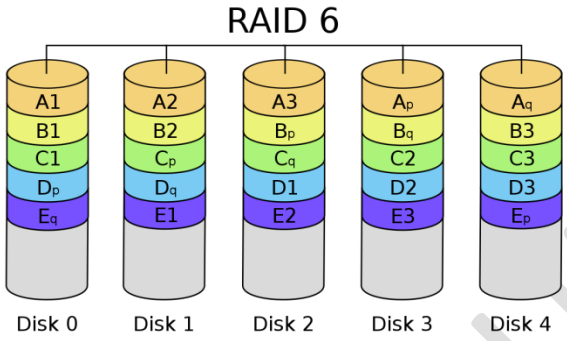

6) USB(Universal Serial Bus)

- Now a day USB hard drives are more popular.
- Advantage of External hard drives is that the computers and laptops have a chance of losing data all the time and also theft is very common as far as laptop is concerned.
- External hard drives are ideal for backing up your hard drive or storing from your main hard drive.
- Now a day l TB hard disks are also very common as the backup's drives.

❖ Physical structure of Hard disk

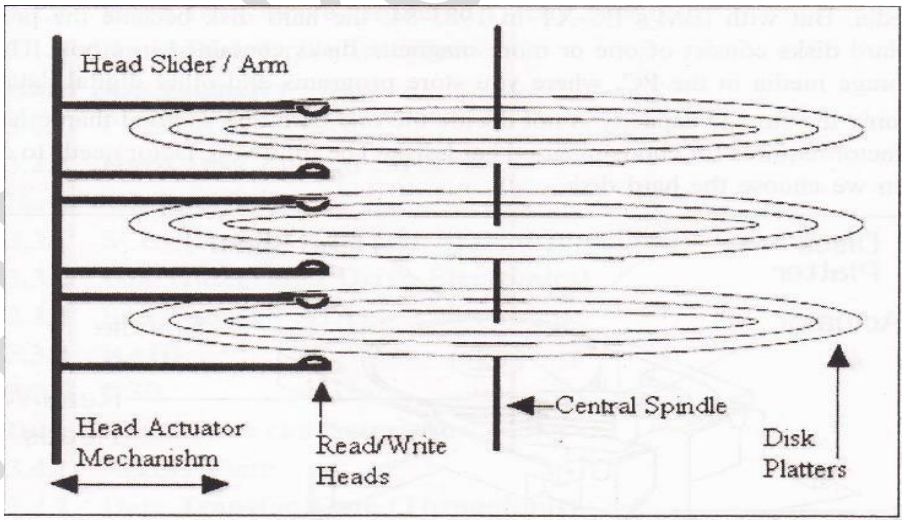

1) DISK PLATTERS:
   - All hard disks consist of thin platters with a magnetic coating.
   - They rotate quite fast inside a metal container.
   - Data are written and read by read/write heads, which are designed to ride on a microscopic cushion of air, without touching the platter. They register bits from the magnetic coating.
   - A hard disk with three platters is shown in figure.
   - Generally the hard disk has minimum 1 platter and maximum up to 10 (even more possible) depend on the hard disk manufacturer.

2) Spindle Motor :
   - The disk platters are connected to one central spindle, which is directly connected to the main spindle motor.
   - Most of the Hard disk drive spindle motor is located at the bottom of the drive.
   - Spindle motor gives circular rotation to the platters for Read/Write operation on specific location On some drives the spindle is connected to the spindle rotation motor through some belt or gears. This motor works on a feedback loop to automatically adjust the disk's rotation speed.
   - To use more platters in Hard disk drive the spindle, motor is directly built into the platter hub inside the sealed assembly. This will allow adding more platters in hard disk drive because the spindle motor does not take any additional vertical space.

3) Read/Write Head

- As shown in above with 3 platters, it has 6 read/write heads, two heads for every one platter, which move synchronously the arms which guide the movement of the read/write heads move in and out.
- These heads do not require cleaning or any other maintenance, as the floppy drive heads because these heads do not touch the disk surface instead it floats a distance above the disk surface during the read/write process. When specifying the head number for reading or writing any information onto the disk drive. The first head is specified as head 0 next 1 so on.
- The synchronous movement of these arms is performed by an electro-mechanical system called the head actuator.
- When the disk rotates under the read/write head it can either read existing data or write new ones.
- In write mode, current is applied to the coil the head will become magnetic.
- This magnetism will orient the micro magnets in the track.
- If the head moves along the track without current applied to the coil, it will sense the micro magnets in the track.
- This magnetism will induce a current in the coil. These flashes of current represent the data on the disk.

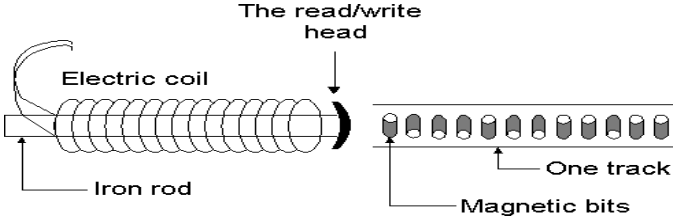

VPMP POLYTECHNIC

3) Head Actuator Mechanism:

- To moving read/write head of the Hard disk drive on the disk platters is referred as Head Actuator Mechanism.
- There are two type of Head Actuator Mechanism
  - **Stepper Motor Actuator (Open-loop disk drive)-** A stepper motor rotates in fix angle with each step. Earlier low capacity, low cost Hard disk drive used this type of Actuator assembly to move read/write head.
  - **Voice Coil Actuator (Closed-loop disk drive)-** The actuator in a modern hard disk uses a device called a voice coil to move the head arms in and out over the surface of the platters, and a closed-loop feedback system called a servo system to dynamically position the heads directly over the data tracks. The voice coil works using electromagnetic attraction and repulsion.

❖ Logical Structure of Hard Disk Drive:

Following are the major logical part of the Disk:

- Sides or Heads
- Tracks
- Cylinder
- Sector
- Zone

1) Sides or Heads:

- Drive with three platters one can read and write on six sides.
- Each side of the disk has a separate read/write head to read/write on the disk surface

2) Tracks:

- Each side of the hard disk drives platter's surface is divided into concentric circles called tracks as shown in above fig.
- Each track is identified by its number. The outer most tracks are given track number 0 the next one 1 and so on. The inner most track have the highest track number.
- The numbers of tracks are depending on the hard disk manufacturer. Generally there are 300 to 500 in range. Typically disk with more tracks may give more hard disk data storage capacity.

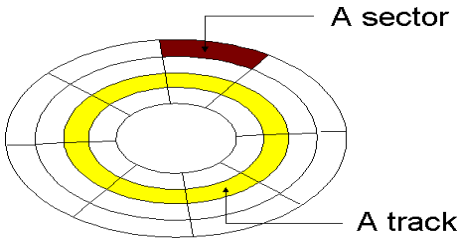

VPMP POLYTECHNIC

3) Cylinders:

- The hard disk having more than one platter makes virtually a cylinder like structure on same tracks of different platters as shown in figure.
- For example the track 1 on the all the platter is make a cylinder 1. The data is stored cylinder by cylinder on the disk. First all the tracks of same cylinder are written. Once a cylinder becomes full the read/write head moves to the next cylinder for writing remaining data**.**

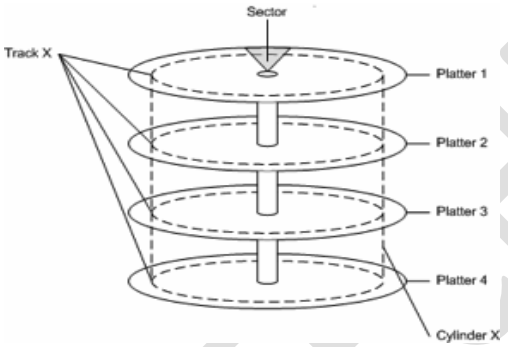

4) Sector:

- The tracks are dividing further which is called the sector.
- Most of the hard drive manufacturer follows a standard for storing no. of data bytes of each sector and as a standard on almost all the drives are stored 512 bytes on each sector.
- Depending on no. of sectors per track storage capacity will change and hence the hard disk capacity
- The sector always starts with the number 1 while the track and cylinder are start with 0.
- One can know the no. of sides track and sectors per track the total hard disk size is easily calculated for example with hard disk having 3 platters(6 sides) 1024 tracks and each track have 37 sectors the hard disk drive size is

  Total sectors=6 x 1024 x 37 = 2,27,328

  Hard Disk Size= 2,27,328 x 512 = 11,63,91,936 bytes = 111 MB

5) Zone:

- When we logically divide the disk in tracks and sector, due to circular shape the outer track or the outer cylinder has much more area compared to the inner track of the disk drive.
- Allocating same number of sectors in the outer as well as inner track of the drive is a waste of the storage capacity of the disk drive.
- The outer tracks have larger area compare to inner tracks, it can be easily divide more sector compare to inner one so one can increase storage capacity of drive
- The outer most zone have maximum no. of sectors per track. For example if the drive has total 15 track then it can be divided into 5 zone having 3 tracks

VPMP POLYTECHNIC

- The 1st outer most track has 40 sectors 2nd outermost zone has 32 sectors 3rd outer most zone has 24 sectors 2nd outer most zone has 16 sectors and the last one has 8 sectors

Zone Bit Recording-

- Zone Bit Recording (ZBR) is used by disk drives to store more sectors per track on outer tracks than on inner tracks. It is also called Zone Constant Angular Velocity**.**

MBR-

- A master boot record (MBR) is a special type of boot sector.
- The MBR holds the information on how the logical partitions, containing file systems, are organized on that medium.

Cluster-

- Each partition on your hard disk is subdivided into clusters. A cluster is the smallest possible unit of storage on a hard disk.
- The size of a cluster depends on two things:
- The size of the partition
- The file system installed on the partition

Landing Zone:

- The landing zone in a hard disk is a reserved area where the read/write heads are parked when the hard drive is not in use. This area is typically located at the innermost diameter of the disk and is designed to prevent the heads from making contact with the data storage surface, which could cause damage.

❖ Disk partitioning or disk slicing

- It is the creation of one or more regions on secondary storage, so that each region can be managed separately. These regions are called partitions.
- It is typically the first step of preparing a newly installed disk, before any file system is created. The disk stores the information about the partitions' locations and sizes in an area known as the partition table that the operating system reads before any other part of the disk.
- Each partition then appears to the operating system as a distinct "logical" disk that uses part of the actual disk.
- System administrators use a program called a partition editor to create, resize, delete, and manipulate the partitions.
- Partitioning allows the use of different file systems to be installed for different kinds of files.
- Separating user data from system data can prevent the system partition from becoming full and rendering the system unusable.
- Partitioning can also make backing up easier.
- A disadvantage is that it can be difficult to properly size partitions, resulting in having one partition with too much free space and another nearly totally allocated

VPMP POLYTECHNIC

❖ Disk Performance Parameters:

It can be grouped into two categories:

1) Access Time
2) Seek Time

1) Access Time:

- The access time of response time of a rotating drive is of measure of time it takes before the drive can actually transfer the data
- The factor that control this time are mostly related to mechanical nature of rotating disk and moving heads
- The key component that are typically added to obtain access time are : seek time and rotational latency

2) Seek Time:

- It is the time taken by each R/W head to reach desired track
- If we can decrease seek time then performance can be improved
- If the initial location of head is desired track then seek time would be 0
- If initial track was outermost edge of media and desired track is at innermost edge then seek time would be maximum
- The track to track measurement is the time required to move from one track to an adjacent track this is shortest possible seek time which is possibly between 0.2 and 0.8 ms
- The full stroke measurement is time required to move from outermost track t innermost track. This is the largest possible seek time

3) Rotation Time:

It is the time taken to complete one full rotation(360 degrees)

4) Rotational Latency:

It is the time taken to reach desired sector(Half of rotation time)

OR

Time taken by sector to come under R/W head

It is also known as <u>Rotational Delay</u> or just <u>Latency</u>

5) Transfer time:

It is the ratio of data to be transferred and transfer rate

$$\text{Transfer Time} = \frac{\text{Data to be transferred}}{\text{Transfer Rate}}$$

Transfer Rate(Data Rate) = No. of heads x Capacity of one track x no. of rotation in 1 sec

Disk Access Time = Seek time + Rotational Time + Transfer time + Controller time (if given) + Que time(waiting time)

VPMP POLYTECHNIC

❖ Keyboard:

- A keyboard is the set of typewriter-like keys that enables you to enter data into a computer.
- Computer keyboards are similar to electric-typewriter keyboards but contain additional keys.
- The keys on computer keyboards are often classified as follows:
  - *Alphanumeric keys*– letters and numbers
  - *Punctuation keys* – comma, period, semicolon, and so on.
  - *Special keys* – function keys, control keys, arrow keys, Caps Lock key, and so on.
- The processor in the keyboard analyzes the key matrix and determines what characters to send to the computer.
- It maintains these characters in its memory buffer and then sends the data.
- Many keyboards connect to the computer through a cable with a PS/2 or USB (Universal Serial Bus) connector.
- Regardless of which type of connector is used, the cable must carry power to the keyboard, and it must carry signals from the keyboard back to the computer.
- Wireless keyboards, on the other hand, connect to the computer through infrared (IR), radio frequency (RF) or Bluetooth connections.
- IR and RF connections are similar to what you'd find in a remote control.
- Regardless of which sort of signal they use, wireless keyboards require a receiver, either built in or plugged in to the USB port, to communicate with the computer.
- Since they don't have a physical connection to the computer, wireless keyboards have an AC power connection or use batteries for power.
- Whether it's through a cable or wireless, the signal from the keyboard is monitored by the computer's keyboard controller.
- Keyboard controller is an integrated circuit (IC) that processes all of the data that comes from the keyboard and forwards it to the operating system**.**

<u>Keyboard working principle(organization)</u>

- With a matrix circuit, any of 61 notes can be determined with only 16 wires.
- This is drawn schematically as a matrix of 8 columns and 8 rows of wires, with a switch at every intersection.
- The keyboard controller scans the columns.
- If a key has been pressed, the controller scans the rows.
- The controller determines the row-column combination at which a key has been pressed, and generates a note corresponding to that key
- When striking a keyboard key, the key oscillates (or bounces) against its contacts several times before settling.
- When released, it oscillates again until it reverts to its rest state.

VPMP POLYTECHNIC

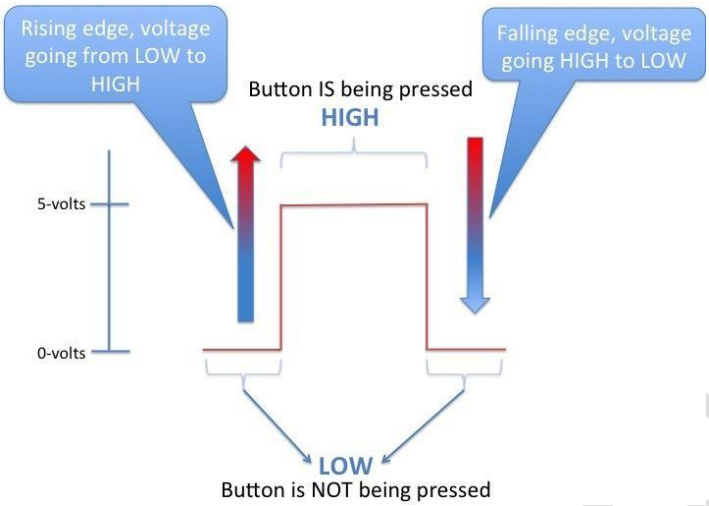

- Although it happens on such a small scale as to be invisible to the naked eye, it's sufficient for the computer to register multiple key strokes inadvertently.
- To resolve this problem, the processor in a keyboard "debounces" the keystrokes
- By aggregating them across time to produce one "confirmed" keystroke that (usually) corresponds to what is typically a solid contact
- **Scan Code**
- Each key generates a 'make' scancode when pressed and a 'break' scancode when released. The computer system interprets the scancodes to determine what operation it is to perform

Layout of Keyboard:

- **A computer keyboard comprises**
  - Alphanumeric or character keys for typing,
  - Modifier keys for altering the functions of other keys,
  - Navigation keys for moving the text cursor on the screen,
  - Function keys,
  - System command keys – such as “Esc” and “Break” – for special actions, and
  - Numeric keypad to facilitate calculations.

  There is some variation between different keyboard models in the mechanical layout – i.e., how many keys there are and how they are positioned on the keyboard.

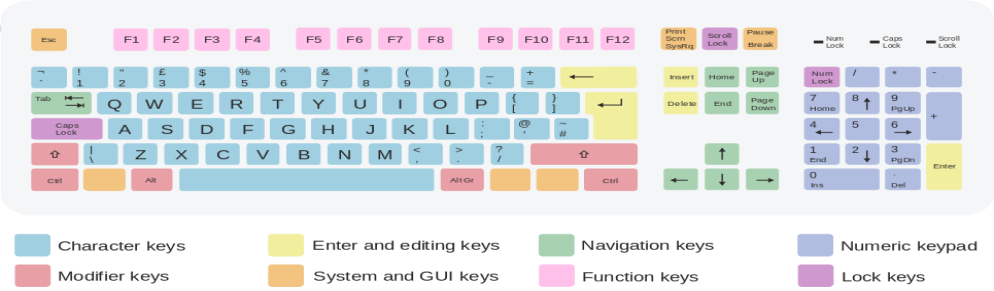

VPMP POLYTECHNIC

Character Key or Alphabet Key

- The core section of a keyboard comprises character keys, which can be used to type letters and other characters.
- Typically, there are three rows of keys for typing letters and punctuation, an upper row for typing digits and special symbols, and the Space bar on the bottom row.
- The positioning of the character keys is similar to the keyboard of a typewriter.

Modifier Key

- Besides the character keys, a keyboard incorporates special keys that do nothing by themselves but modify the functions of other keys.
- For example, the ⇧ Shift key can be used to alter the output of character keys, whereas the ^ Ctrl (control) and ^ Alt (alternate) keys trigger special operations when used in concert with other keys.
- Typically, a modifier key is held down while another key is struck.

Cursor Movement Key

- Cursor movement arrows are provided in the middle of alphabet and numeric keys.
- Two rows with group of three keys include Insert, Delete, Home, End, Page Up and Page Down keys are provided just above the cursor movement keys.
- When "Num Lock" indicator is off, then the numeric key pad is used as cursor movement key.

Function Key

- Function keys from F1 to F12 are spaced in group of four on the topmost area of keyboard
- They don't have fixed purpose and the user can assign function to these keys by programming.
- e.g. F1 is used to show help message / help content on screen.

<u>Types of Keyboard:</u>

1) <u>PC-XT keyboard</u>

- This keyboard has only one side communication. The keyboard can send information to the system but the system was not allowed to send any information or command to the keyboard.
- Number of Keys: 83
- Mode of Communication: Unidirectional
- Size of Enter and Shift keys were small.

VPMP POLYTECHNIC

- Keys were marked with arrows instead of word describing them
- No indicators to show status of num_lock, caps_lock and scroll_lock

PC-AT Keyboard:

- Number of Keys: 84
- Mode of Communication: Bidirectional
- Numeric keypad moved away from alphabet keys
- Indicators available to show status of num_lock, caps_lock and scroll_lock
- Size of Enter and Shift keys is increased and word "Enter" is printed on the key top.
- Most of the keys that were indicated only with arrow symbols were also indicated with sort word describing them.

Enhanced PC-AT Keyboard:

- Number of Keys: 101
- Additional navigation and control keys
- 12 function keys in separate row along top were provided
- The size of "Enter" key is reduced to a small size
- Provided additional CTRL and ALT keys on both sides of space bar for easy access

Types of Keyboard Switches:

- Computer keyboards can be classified by the switch technology that they use.
- Computer keyboards have 80–110 durable switches, one for each key.
- The choice of switch technology affects key response (the positive feedback that a key has been pressed) and travel (the distance needed to push the key to enter a character reliably).

A) Capacitive Switch

- Current constantly flows through all parts of the key matrix.
- Each key is spring-loaded and has a tiny plate attached to the bottom of it.
- When you press a key, it moves this plate closer to the plate below it.
- As the two plates move closer together, the amount of current flows through the matrix changes.
- The processor detects the change and interprets it as a key press for that location.
- Capacitive switch keyboards are expensive, but they have a longer life than any other keyboard.
- Also, they do not have problems with bounce since the two surfaces never come into actual contact.

B) Hall Effect Switch

- Hall Effect keyboards use magnets and Hall Effect sensors instead of an actual switch.

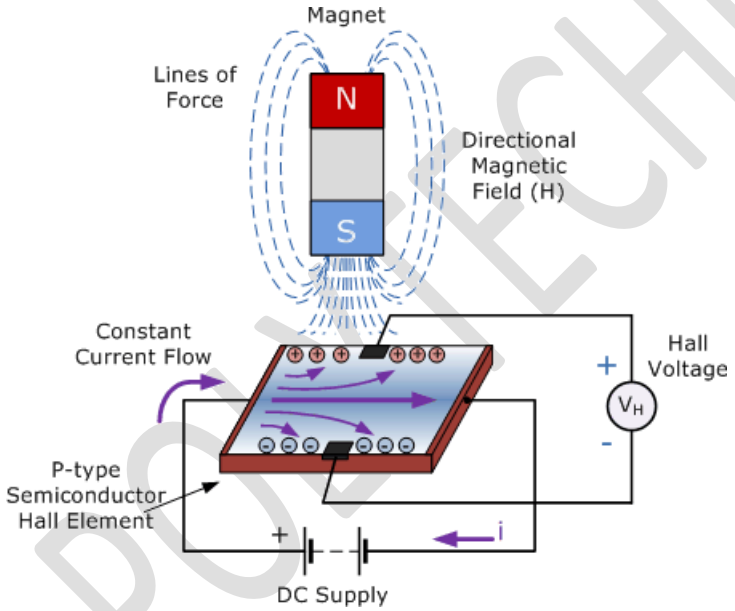

- When a key is depressed, it moves a magnet, which is detected by the solid-state sensor.
- These keyboards are extremely reliable, and are able to accept millions of keystrokes before failing.
- These keyboards can be easily made totally waterproof.
- They also resist large amounts of dust and contaminants.
- Because a magnet and sensor are required for each keys, and custom control electronics, they are very expensive.

C) Dome-Switch

- Dome switch uses small, flexible rubber domes, each with a hard carbon center.
- When you press a key, a plunger on the bottom of the key pushes down against the dome, the carbon center presses against a hard, flat surface beneath the key matrix.
- As long as the key is held, the carbon center completes the circuit.
- When the key is released, the rubber dome springs back to its original shape, forcing the key back up to its at-rest position.
- Rubber dome switch keyboards are inexpensive, have pretty good tactile response

VPMP POLYTECHNIC

- Switches are fairly resistant to spills and corrosion because of the rubber layer covering the key matrix.

D) Membrane Switch

- A membrane keyboard is a computer keyboard whose "keys" are pressure pads that have only outlines and symbols printed on a flat, flexible surface.
- Membrane keyboards, which work by electrical contact between the keyboard surface and the underlying circuits when key-top areas are pressed, were used with some early 1980s.
- The keyboards are very inexpensive to mass-produce, and are more resistant against dirt and liquids than most other keyboards.
- The membrane keyboard basically consists of three layers; two of These are membrane layers containing conductive traces.
- The center layer is a "spacer" containing holes wherever a "key" exists. It keeps the other two layers apart.

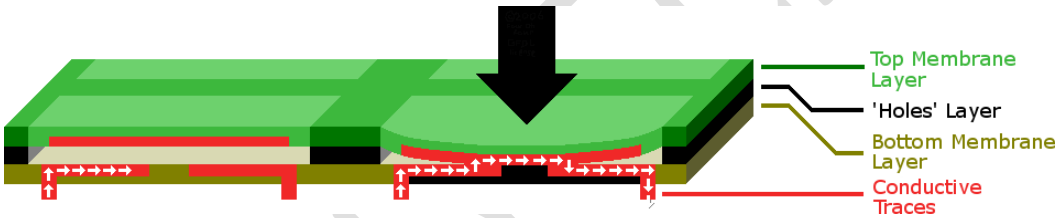

- Under normal conditions, the switch (key) is open, because current cannot cross the non- conductive gap between the traces on the bottom layer.
- However, when the top layer is pressed down (with a finger), it makes contact with the bottom layer.
- The conductive traces on the underside of the top layer can then bridge the gap, allowing current to flow.
- The switch is now "closed", and the parent device registers a key-press.

E) Mechanical Switch

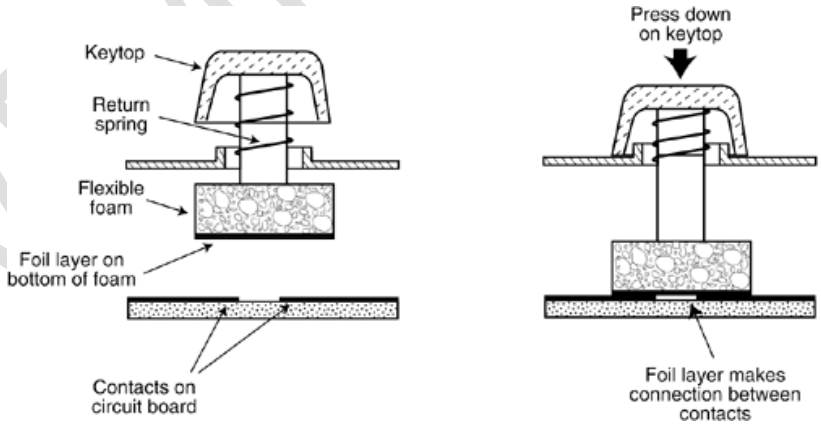

- The pure mechanical type is a simple mechanical switch that features metal contacts in a momentary contact arrangement.
- The switch often includes a feedback mechanism, consisting of a clip and spring arrangement designed to give a "clicky" feel to the keyboard and offer some resistance to the key-press.
  Mechanical switches are very durable, usually have self-cleaning contacts, and are normally rated for 20 million keystrokes.

Types of Keyboard Interfaces:

- The keyboard connector is the device at the end of the cable that is used to attach the keyboard to the system.

Wired keyboard

DIN

- The older style is the larger of the two, called the 5-pin DIN keyboard connector.
- DIN stands for Deutsche Industries Norm, a German standards-setting organization.
- It was used on the first PCs, and became the standard connection through about the mid- 1990s.

Pin	Description	Image
1	Keyboard Clock	
2	Keyboard Data	
3	Not Connected	
4	Ground	
5	Power (+5 V)	
6	-	

PS/2

- The smaller is the 6-pin, so-called "mini-DIN" keyboard connector.
- The smaller connector was introduced on the IBM model PS/2 and is therefore sometimes called a "PS/2 connector".
- It has replaced the larger connector as the standard for modern PCs.

Pin	Description	Image
1	Keyboard Data	
2	Not Connected	
3	Ground	
4	Power (+5 V)	
5	Keyboard Clock	
6	Not Connected	

USB

- USB, or Universal Serial Bus, is the most common type of interface and has become the standard interface on all current computers.
- One of the benefits of a well-defined specification like the USB is the abundance of device drivers available in most modern operating systems.
- Because of these generic descriptions, it is easy for operating system designers to include

VPMP POLYTECHNIC

functioning drivers for devices such as keyboards, mice, and other generic human interface devices.

Pin	Description	Image
1	Power (+5 V)	
2	Data -	
3	Data +	
4	Ground	

Wireless Keyboard

- A wireless keyboard is a computer keyboard that allows the user to communicate with computers, tablets, or laptops with the help of radio frequency (RF), infrared (IR) or Bluetooth technology.
- Wireless keyboards based on infrared technology use light waves to transmit signals to other infrared-enabled devices.
- But, in case of radio frequency technology, a wireless keyboard communicates using signals which range from 27 MHz to up to 2.4 GHz.
- Most wireless keyboards today work on 2.4 GHz radio frequency.
- Bluetooth is another technology that is being widely used by wireless keyboards.
- These devices connect and communicate to their parent device via the Bluetooth protocol.
- A wireless keyboard can be connected using RF technology with the help of two parts, a transmitter and a receiver.
- The radio transmitter is inside the wireless keyboard.
- The radio receiver plugs into a keyboard port or USB port.
- Once the receiver and transmitter are plugged in, the computer recognizes the keyboard and mouse as if they were connected via a cable.

❖ MOUSE:

- A mouse is an input device that detects two-dimensional motion relative to a surface.
- This motion is typically translated into the motion of a pointer on a display, which allows for fine control of a graphical user interface.
- A mouse consists of an object held in one's hand, with one or more buttons.
- Mice often also feature other elements, such as touch surfaces and "wheels", which enable extra control and dimensional input.

Operation and working principle:

- A mouse typically controls the motion of a pointer in two dimensions in a graphical user interface (GUI).
- The mouse turns movements of the hand backward and forward, left and right into

VPMP POLYTECHNIC

equivalent electronic signals that in turn are used to move the pointer.

- Clicking or hovering (stopping movement while the cursor is within the bounds of an area) can select files, programs or actions from a list of names, or (in graphical interfaces) through small images called "icons" and other elements.

Click: pressing and releasing a button.

- (left) Single-click: clicking the main button.
- (left) Double-click: clicking the button two times in quick succession count as a differentgesture than two separate single clicks.
- (left) Triple-click: clicking the button three times in quick succession.
- (left) Quadruple-click: clicking the button four times in quick succession.
- Right-click: clicking the secondary button.
- Middle-click: clicking the tertiary button

Drag: pressing and holding a button, then moving the mouse without releasing. Button chording

- Combination of right-click then left click.
- Combination of left-click then right-click or keyboard letter.
- Combination of left or right-click and the mouse wheel.
- Clicking while holding down a modifier key.

Moving the Pointer a long distance:

- When a practical limit of mouse movement is reached, one lifts up the mouse brings it to the opposite edge of the working area while it is held above the surface and then replaces it down onto the working surface

<u>Types of Mouse:</u>

There are three basic types of mouse:

1) Mechanical:
   Has a rubber or metal ball on its underside that can roll in all directions. Mechanical sensors within the mouse detect the direction the ball is rolling and move the screen pointer accordingly
2) **Optomechanical**: Same as a mechanical mouse, but uses optical sensors to detect motion of the ball.
3) **Optical**: Uses a laser to detect the mouse's movement.

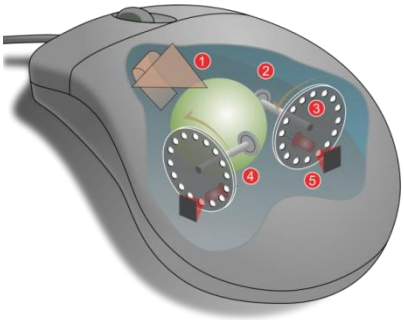

VPMP POLYTECHNIC

- You must move the mouse along a special mat with a grid so that the optical mechanism has a frame of reference.
- Optical mice have no mechanical moving parts.
- They respond more quickly and precisely than the other two type, but they are also more expensive.

Types of Mouse Interface

- Serial Port Mouse
  - A serial port is a serial communication physical interface through which information transfers in or out one bit at a time.
  - A mouse that connects to a computer via a serial port is serial port mouse.
  - 9-pin connector is used to connect mouse.
-
- PS/2 Port Mouse
  - The PS/2 connector is a 6-pin Mini-DIN connector for connecting mice to computer system.
  - They are not designed to be hot swappable.
  - It is necessary to restart a PC when you connect mouse to computer when it is on.

Pin	Description	Image
1	Keyboard Data	
2	Not Connected	
3	Ground	
4	Power (+5 V)	
5	Keyboard Clock	
6	Not Connected	

- USB Port Mouse
  - USB, or Universal Serial Bus, is the most common type of interface and has become the standard interface on all current computers.
  - One of the benefits of a well-defined specification like the USB is the abundance of device drivers available in most modern operating systems.
  - Because of these generic descriptions, it is easy for operating system designers to include functioning drivers for devices such as keyboards, mice, and other generic human interface devices.

VPMP POLYTECHNIC

Pin	Description	Image
1	Power (+5 V)	
2	Data -	
3	Data +	
4	Ground	

- Wireless Mouse
  - A wireless mouse is a computer mouse that needs no wires to send signals from the mouse to a computer.
  - The cordless mouse offers obvious advantages over its tethered brethren, such as being able to point and click on a computer screen from across the room and run on multiple surfaces.
  - Being radio-based, RF devices require two main components: a ***transmitter*** and a ***receiver***.
  - One of the RF technologies that wireless mice commonly use is Bluetooth.
  - Bluetooth technology wirelessly connects peripherals such as printers, headsets, keyboards and mice to Bluetooth-enabled devices such as computers and personal digital assistants (PDAs).
    - **How it works?**
      - The transmitter is housed in the mouse.
      - It sends an electromagnetic (radio) signal that encodes the information about themouse's movements and the buttons you click.
      - The receiver, which is connected to your computer, accepts the signal, decodes it andpasses it on to the mouse driver software and your computer's operating system.
  - The receiver can be a separate device that plugs into your computer, a special cardthat you place in an expansion slot, or a built-in component

❖ Scanner:

<u>Types of scanner:</u>

1) **Flatbed scanners**
   - Flatbed scanners also called desktop scanners are the most versatile and commonly used scanners.
2) **Sheet-fed scanners**
   - These are similar to flatbed scanners except the document is moved and the scan head is immobile.
   - A sheet-fed scanner looks a lot like a small portable printer.
3) **Handheld scanners**
   - It use the same basic technology as a flatbed scanner, but rely on the user to move them instead of a motorized belt.

VPMP POLYTECHNIC

- This type of scanner typically does not provide good image quality. However, it can be useful for quickly capturing text.

4) Drum scanners

- These are used by the publishing industry to capture incredibly detailed images.
- They use a technology called a photomultiplier tube (PMT).
- In PMT, the document to be scanned is mounted on a glass cylinder.
- At the center of the cylinder is a sensor that splits light bounced from the document into three beams. Each beam is sent through a color filter into a photomultiplier tube where the light is changed into an electrical signal

TWAIN and WIA

TWAIN and WIA are standards for communicating between scanner devices and software applications

TWAIN

- You can use it to scan directly into any software application that supports TWAIN, for example a raster to vector conversion program.
- This means that after you scan, the scanned image will appear in the application already open.
- When you scan using an application that supports TWAIN, the scanning dialog and the options it contains are specified by your scanner's manufacturer (Canon, Epson, HP, Contex , Graphtec etc.) and will therefore vary depending on the type of scanner you have.

WIA (Window Image Acquition)

- WIA (Window Image Acquition) is a Microsoft utility that is supplied as part of windows.
- Like TWAIN; WIA allows you to scan directly with a "WIA compliant" scanner into any application that supports WIA or TWAIN – all TWAIN compliant application support WIA as well.
- Unlike TWAIN, however, the scanning dialog that appears when you scan and the controls on it are variations on a basic Microsoft design.
- This means that the level of functionality and scanning control that are available in a WIA interface are less comprehensive than in a well-written TWAIN interface

❖ Printers:

- A printer is a peripheral which makes a representation of an electronic document on physical media.
- Individual printers are designed to support local and network users at the same time

VPMP POLYTECHNIC

Classification of Printers:

A) Based on the image formation methodFully

1) Formed Character Printer

- All the printable character are made in advance and provided in the printer as a part ofprinter hardware itself.
- By pressing any key, one can get the shape printed on the paper.
- This type of printer can only print ready-made characters on the paper, but not print anyother character which is not stored inside its hardware.
- Most of the fully formed character printer use impact method to print on the paper.
- Due to this it can generate high noise.
- Some of the fully formed character type printers are:
  - Daisy-Wheel printer
  - Chain printer
  - Drum printer

2) Bit Image Printer

- The characters are formed from dots placed within a matrix.
- It can be capable to print text as well as graphic image.
- By controlling individual dots, computer can make these printers to produce any requiredpattern.
- Some of the bit image printers are:
  - Dot matrix printer
  - Line printer

B) Based on the printing mechanism used by printer

- Printing mechanism refers to the method used by the printer to produce the image on the output media such as paper, OHP, etc.
- Printer category based on the mechanism is classified as follow:
  - Impact Printer
  - Non-Impact Printer

Impact Printer

- An impact printer is a type of printer that operates by striking a metal or plastic headagainst an ink ribbon.
- The ink ribbon is pressed against the paper, marking the page with the appropriate character, dot, line, or symbol.
- Common examples of impact printers include dot matrix, daisy-wheel printers, and ball printers.
- These printers are generally very low cost and easy to operate.
- It generates too much of noise while printing.

1) Daisy Wheel Printer

- It uses interchangeable pre-formed type elements to generate high-quality output.
- The daisy wheel is considered to be so named because of its resemblance to the daisy flower.

VPMP POLYTECHNIC

- The heart of the system is an interchangeable metal or plastic "daisy wheel" holding an entire character set as raised characters moulded on each "petal".

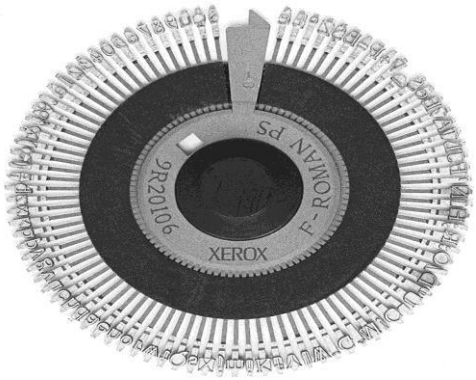

- A servo motor rotates the daisy wheel to position the required character between the hammer and the ribbon.
- The solenoid-operated hammer then fires, driving the character type onto the ribbon and paper to print the character on the paper.
- The daisy wheel and hammer are mounted on a sliding carriage.
- Different typefaces and sizes can be used by replacing the daisy wheel.
- It is possible to use multiple fonts within a document.
- Font changing is facilitated by printer device drivers which can position the carriage to the center of the platen and prompt the user to change the wheel before continuing printing.

2) Line Printer

- The line printer is a form of high speed impact printer in which one line of type is printed at a time.
- Print speeds of 600 to 1200 lines-per-minute.
- The different types of line printers are drum printers and chain printers.

a) Chain Printer

- The chain spins horizontally around a set of hammers.
- When the desired character is in front of the selected print column, the corresponding hammer hits the paper into the ribbon and onto the character in the chain.

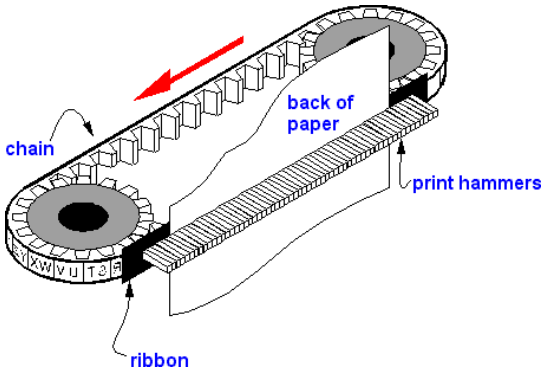

VPMP POLYTECHNIC

b) Drum Printer

- In a typical drum printer design, a fixed font character set is engraved onto the periphery of a number of print wheels, the number matching the number of columns (letters in a line) the printer could print.

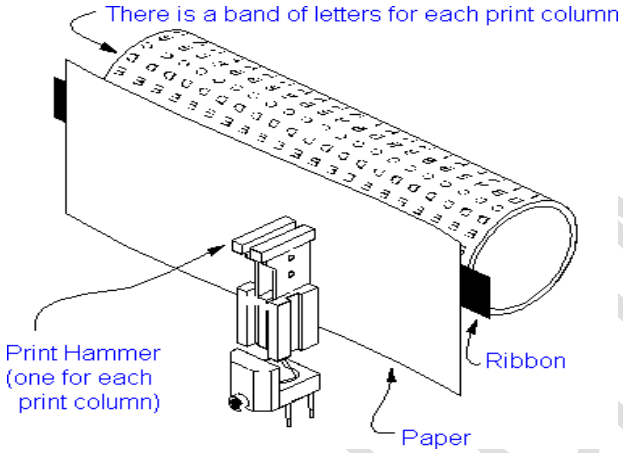

- The wheels, joined to form a large drum (cylinder), spin at high speed and paper and an inked ribbon is stepped (moved) past the print position.
- As the desired character for each column passes the print position, a hammer strikes the paper from the rear and presses the paper against the ribbon and the drum, causing the desired character to be recorded on the continuous paper.
- Because the drum carrying the letterforms (characters) remains in constant motion, the strike-and-retreat action of the hammers had to be very fast.

3) Dot Matrix Printer

- Dot matrix printing or impact matrix printing is a type of computer printing which uses a print head that runs back and forth, or in an up and down motion, on the page and prints by impact, striking an ink-soaked cloth ribbon against the paper.
- Each dot is produced by a tiny metal rod, also called a "wire" or "pin", which is driven forward by the power of a tiny electromagnet either directly or through small levers.
- Facing the ribbon and the paper is a small guide plate pierced with holes to serve as guides for the pins.
- The portion of the printer containing the pins is called the print head.

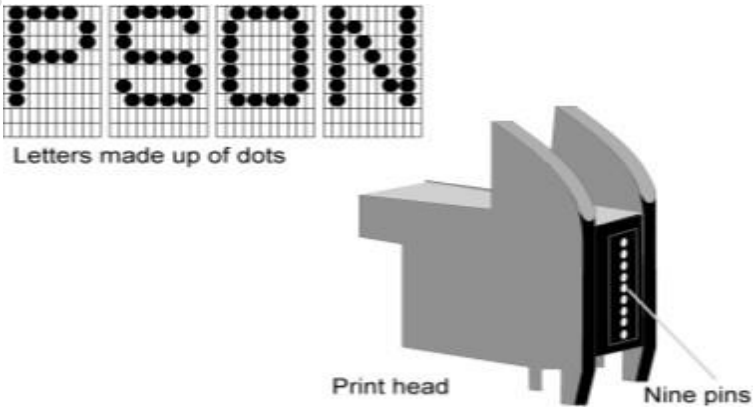

- When running the printer, it generally prints one line of text at a time.

- Such printers would have either 9 or 24 pins on the print head.
- 24-pin print heads were able to print at a higher quality.
- Feature:
  - Very simple operation
  - Low maintenance
  - Low operating cost
  - Provide facility to print on any type of paper
  - Faster than other impact printer

Non-Impact Printer

- The non-impact printer use ink spraying, electrostatic magnetization or heat process to produce the required image on the paper or any other output media.
- This type of printers today becomes popular due to their soundless operation and very high quality output.

1) Thermal Printer

- Thermal printing (or direct thermal printing) is a digital printing process which produces a printed image by selectively heating coated thermochromic paper, or thermal paper as it is commonly known, when the paper passes over the thermal print head.
- The coating turns black in the areas where it is heated, producing an image.
- Two-colour direct thermal printers can print both black and an additional colour (often red) by applying heat at two different temperatures.

A thermal printer comprises these key components:

- Thermal head: generates heat; prints on paper
- Platen: a rubber roller that feeds paper
- Spring: applies pressure to the thermal head, causing it to contact the thermo sensitive paper
- Controller boards: for controlling the mechanism

2) Inkjet Printer

- An inkjet printer is any printer that places extremely small droplets of ink onto paper to create an image.
- The core of an inkjet printer, the print head contains a series of nozzles that are used to spray drops of ink.
- Depending on the manufacturer and model of the printer, ink cartridges come in various combinations, such as separate black and color cartridges, color and black in a single cartridge or even a cartridge for each ink color.
- The cartridges of some inkjet printers include the print head itself.
- A stepper motor moves the print head assembly (print head and ink cartridges) back and forth across the paper.
- Some printers have another stepper motor to park the print head assembly when the printer is not in use.
- Parking means that the print head assembly is restricted from accidentally moving.
- A belt is used to attach the print head assembly to the stepper motor.
- The print head assembly uses a stabilizer bar to ensure that movement is precise and controlled.

VPMP POLYTECHNIC

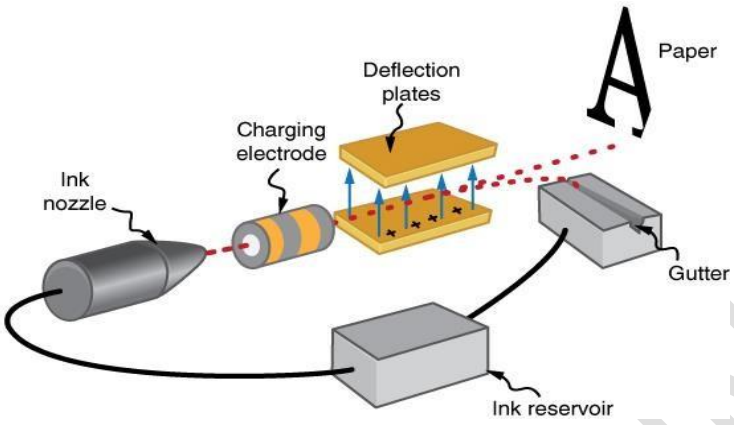

3) Laser Printer

- Laser printing is an electrostatic digital printing process
- It rapidly produces high quality text and graphics by passing a laser beam over a charged drum to define a differentially charged image.
- The drum then selectively collects charged toner and transfers the image to paper, which is then heated to permanently fix the image.

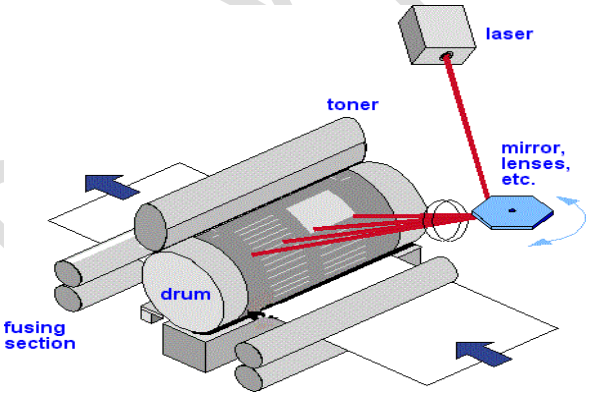

- A laser beam, typically from an aluminum gallium arsenide semiconductor laser, projects an image of the page to be printed onto an electrically charged rotating drum coated with selenium or, more common in modern printers, organic photoconductors.
- Photoconductivity allows charge to leak away from the areas exposed to light.
- Powdered ink (toner) particles are then electro statically picked up by the drum's charged areas, which have not been exposed to the laser beam.
- The drum then prints the image onto paper by direct contact and heat, which fuses the ink to the paper.

❖ Monitors:

The monitor is characterized by their supported display card standards. There are basically three main types of monitors

1) Digital Monitor
2) Analog Monitor
3) Multi scanning Monitor

LED Monitor:

- A LED display is a flat panel display that uses an array of light-emitting diodes as pixels for a video display.
- Their brightness allows them to be used outdoors where they are visible in the sun for store signs and billboards.
- In recent years, they have also become commonly used in destination signs on public transport vehicles, as well as variable-message signs on highways.
- LED displays are capable of providing general illumination in addition to visual display, as when used for stage lighting or other decorative (as opposed to informational) purposes.
- LED displays can offer higher contrast ratios than a projector and are thus an alternative to traditional projection screens, and they can be used for large, uninterrupted (without a visible grid arising from the bezels of individual displays) video walls.
- Micro LED displays are LED displays with smaller LEDs, which poses significant development challenges.
- Light Emitting Diode (LED) display technology is in a fascinating stage now.
- The evolution of the display technology started with the cathode ray tube to cutting-edge OLED technology.
- LED displays still hold a market share of around 40%.

Construction of LED light

- Let's get back to our LED display design which remains incomplete
- Some pixels are brighter than others because the backlight LED arrays are providing uneven light.
- With the help of diffuser sheets, I can evenly spread the light.
- However, the diffuser sheet spreads light in all directions which reduces brightness in the desired direction.
- To solve this issue, let's add a prism sheet in front of the diffuser sheet. The prism sheet concentrates light in a forward direction.
- This is the actual construction of the LED display as shown in fig

VPMP POLYTECHNIC

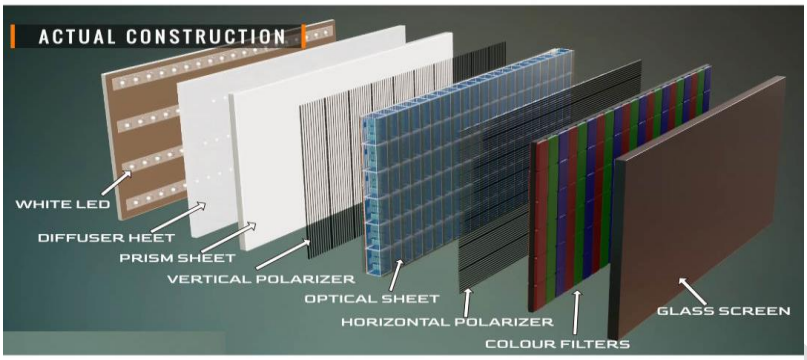

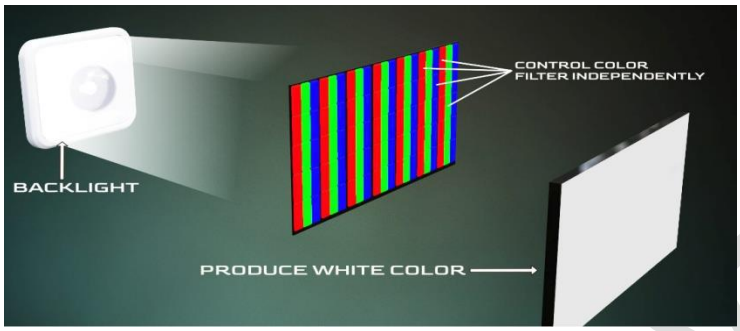

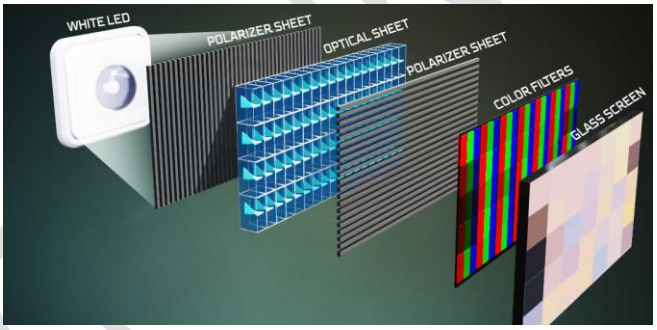

How does the display work?

The quality of the image will improve if I reduce the size of each of the LEDs. However, this causes an issue. I cannot reduce the size of LEDs after a limit due to manufacturing difficulty. To obtain a 4K quality image, the size required for the LED is approximately one-third of a millimeter which is difficult to achieve.

So, how can scientists overcome this problem? Instead of making extremely small RGB LEDs, they used miniature color filters for the display and used normal-sized white LEDs as a backlight. However, this arrangement will just produce a white color when the backlight is turned on as shown in fig 3a and it produces a black color when the backlight is turned off. To produce different colors, we must be able to control the intensity of light for each color filter independently. This can be achieved by a clever arrangement of two polariser sheets and a material that can change the optical angle

Light intensity controlling mechanism

Now, let's understand the light intensity controlling mechanism. When the backlight incident on a vertical polarizer, it will allow only the vertical component of light to pass, blocking out all other components. The role of the optical sheet now comes into play. It is the size of a subpixel. When I give a rotate signal to this sheet, it will rotate the vertically polarized light to the angle I want. If this angle of rotation is 90 degrees, the next polarizer layer, the horizontal polarizer, will allow the light to pass through completely as shown in fig 4a. If I rotate the light less than 90 degrees, the horizontal polarizer will block out some of the light, and the intensity of the subpixel will be reduced. If the angle of rotation is 0 degrees, obviously the whole light will be blocked. This is the way I can control each subpixel's light intensity.

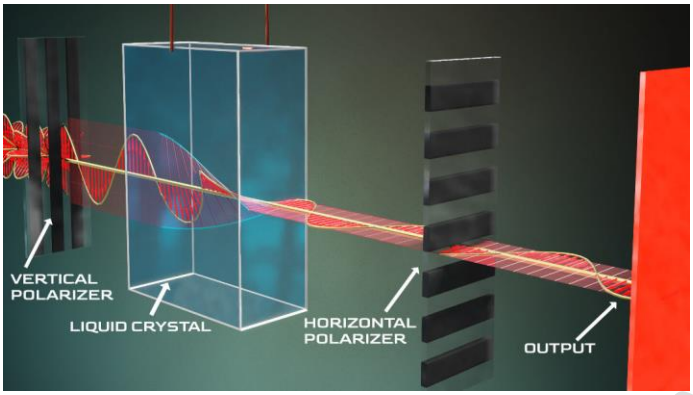

Using three such units, I can construct a pixel as shown in fig. Now I can obtain any color pixel simply by varying the angle of light rotation. To get a cyan color, I simply need to block the red filter light. Similarly, to get a yellow color, I need to block the blue filter light. Using this clever arrangement, I can build an entire display system. This is the basic design behind an LED TV.

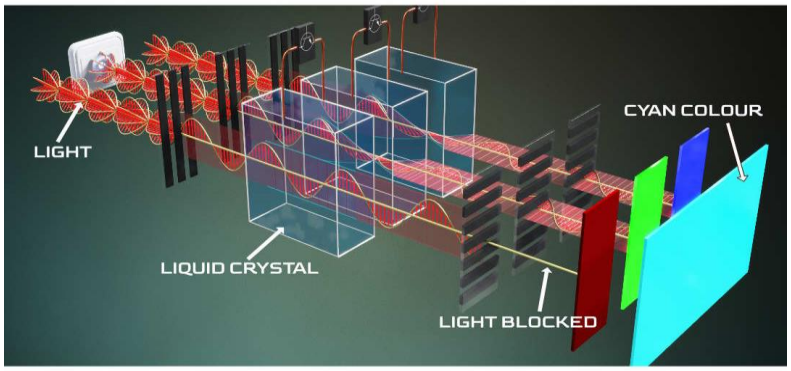

LCD Monitor:

What is Liquid Crystal Display:

Liquid Crystal Display (LCD) is an flat display screen used in electronic devices such as laptop, computer, TV, cell phones and portable video games. As the name says liquid crystal is a material which flows like a liquid and shows some properties of solid. These LCD are very thin displays and it consumes less power than LEDs.

Molecular arrangement of Liquid Crystal:

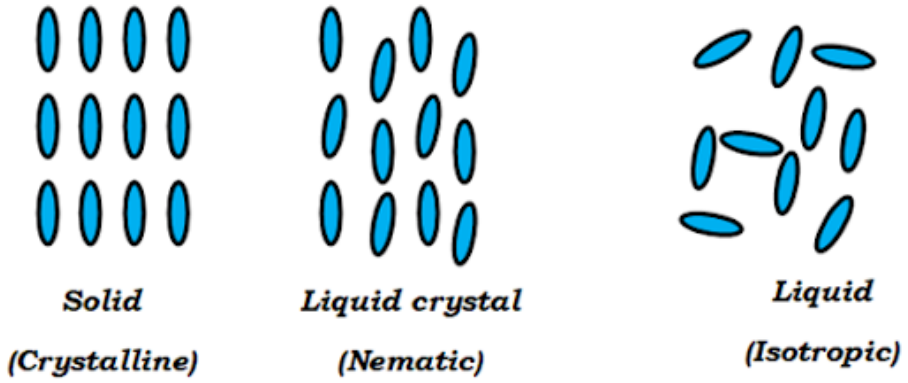

Learn Electronics with me

Molecular arrangement of liquid crystal

As the name says the molecular structure of liquid crystal is in between solid crystal and liquid isotropic. In Liquid crystal display (LCD) nematic type of liquid cyrstal molecular arrangement is used in which molecules are oriented in some degree of alignment. For example when we increase the temperature the ice cube melts and liquid crystal is like the state in between ice cube and water

Construction of Liquid Crystal Display:

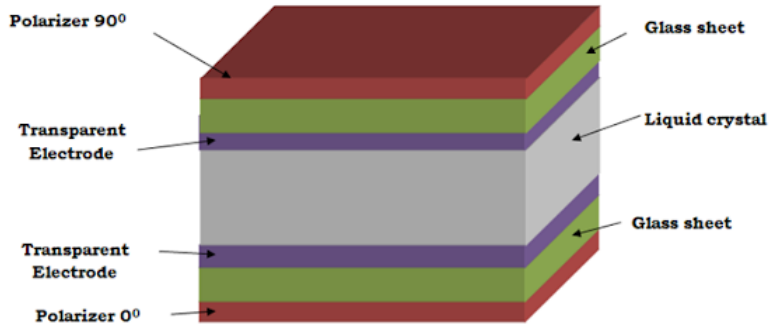

Learn Electronics with me

Construction of LCD

Construction of LCD consists of two polarized glass pieces. Two electrodes are used, one is positive and the other one is negative. External potential is applied to LCD through this electrodes and it is made up of indium-tin-oxide. Liquid crystal layer of about 10µm- 20µm is placed between two glass sheets. The light is passed or blocked by changing the polarization.

Working of Liquid Crystal Display

The basic working principle of LCD is blocking of light. It does not produce light on its own. So external light source is used. When the external light passes from one polarizer to the next polarizer, external supply is given to the liquid crystal ,the polarized light aligns itself so that the image is produced in the screen.

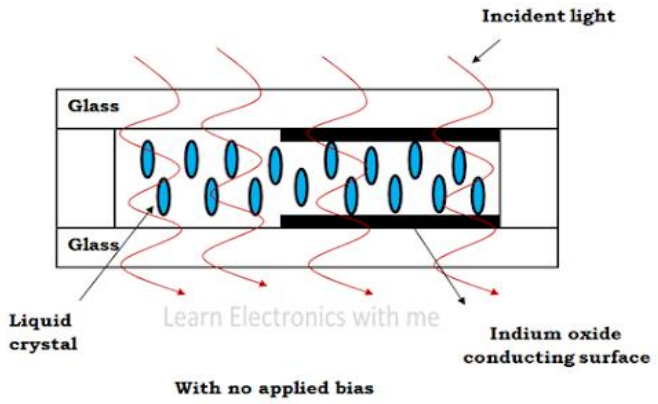

Working of LCD

The indium oxide conducting surface is a transparent layer which is placed on both the sides of the sealed thick layer of liquid crystal . When no external bias is applied the molecular arrangement is not disturbed.

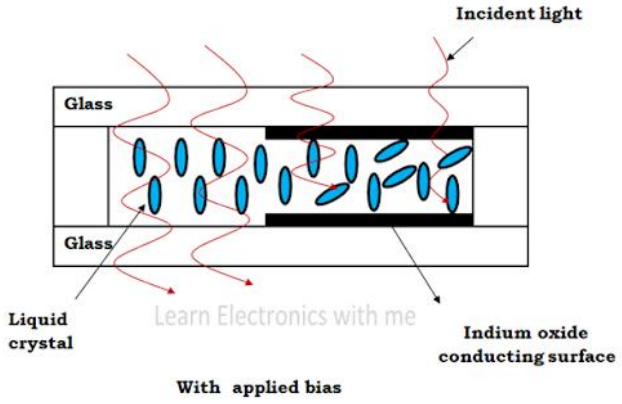

When the external bias is applied the molecular arrangement is disturbed and it and that area looks dark and the other area looks clear.

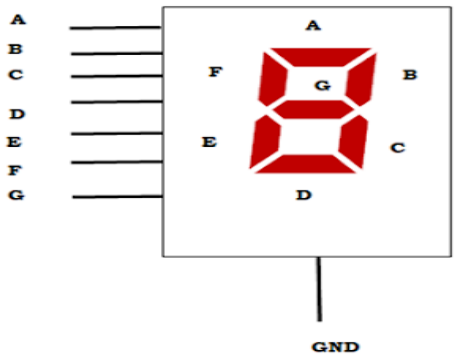

Learn Electronics with me

LCD Display

In the segment arrangement, the conducting segment looks dark and the other segment looks clear. To display number 2 , the segments A,B,G,E,D are energized.

In positive LCD display the segments are dark and the background is white and the polarizers are placed perpendicular to each other. In the negative LCD display the segments are white in the dark background and the polarizers are aligned to each other.

Advantages:

- It is thin and compact
- Low power consumption
- Less heat is emitted during operation
- Low cost

Disadvantages:

- Speed of operation is low
- Lifespan is less
- Restricted viewing angles

Applications:

- Used in digital wrist watch

VPMP POLYTECHNIC

- Display images in digital cameras
- Used in numerical counters
- Display screen in calculators
- Mainly used in television
- Used in mobile screens
- Used in video players
- Used in image sensing circuits

❖ CD(COMPACT DISK):

- Compact disc is portable storage devices used for storing digital data like recording, storing, and playing video, and audio. Compact Disc can be explained as a disc-like memory device made from plastic material.
- CDs or Compact Disks are optically readable media. CDs are the replacement of the phonograph disc. The main material of the CD is plastic.
- The shape of the plastic is circular and one side of the circular plastic is coated with the reflecting metal coating, usually aluminium.
- Data can be stored much more densely in optic media than in magnetic media, like Hard disk. Optic media have a much longer life span. Millions of bits are burned into this coating.
- CDs can store many types of data, like audio, video, games, any documents, etc. The data are scanned by a laser beam with a CD driver to visualize the data.
- The only thing that is less in CD is storage capacity is very less compared to HDD or DVD and the read-write speed is also very less. The storage capacity of a CD is 700 MB only.

History of Compact Disk

- At first, as CD invented in the year 1960 by the American physicist **James Russell**. The compact disk (CD) was introduced by Philips and Sony in 1980 and released in 1982.

- One day he listened to music and he recognizes that the audio quality is very poor and he tried to improve the record player. But he realized that the poor quality of the music happens due to the recorder due to the contact of the needle with the recorder.
- Then he thought this can be avoided by using a light to read the music without physically touching the disk. Then he started working on digital data with optic media and found a way to record media onto a photosensitive platter with tiny bits of light and dark of size 1-micron in diameter.
- Then he filed a patent application in 1966, and the patent was granted in 1970. After this Sony and Philips licensed with his patents for recording using optic readable media. After all this finally, in 1982 Sony released a CD player name CDP-101. This is how CDs are introduced.

How Compact Disc Works?

Compact discs, sometimes known as CDs, typically have a diameter of 12 cm, or 4.5 inches. There are four distinct layers in it.

- **Top Layer**
- **Lacquer Layer**
- **Reflective Layer**
- **Polycarbonate Disc Layer**

- The top layer is used to mark the disc's identification marks, and it may also carry printed instructions or a name identifying the contents of the device.
- Below the top layer, in the lacquer layer, The device is protected from exposure to atmospheric air, which can cause oxidation. The reflective layer, which is constructed of aluminium material and is located beneath the lacquer layer, is where the laser beam is pointed in order to catch a reflection, which can then be used to read the disk's data. The data are encoded for the compact disc to function properly in the polycarbonate layer at the bottom of the disc.
- A CD player or disc drive is required in order to access a compact disc. It is made up of a variety of hardware components, including a tiny laser beam and another tiny electronic light detector, within a CD player. Here, a semiconductor diode laser is used to produce the laser beam, and a photoelectric cell serves as the electronic light detector.
- When the CD player or disc drive is turned on, the internal motor of the device enables the compact disc to rotate at a significant high speed, between 200 and 500 rotations per minute. This causes the internal semiconductor diode laser to be powered up and begin scanning the disc's tracks from the centre outward. To read the data from the base layer, this is transferred through the disc. As a result, the reflection that was generated can retrieve the data from the CD and provide it to the device accessing the CD. The digital light detector can receive the reflection and read the electronic contents that are already saved into the storage unit.

Characteristics of Compact Disk

VPMP POLYTECHNIC

- The standard diameter of a CD is 120mm and thickness is 1.2mm.
- The main body of the CD is made of hard plastic known as polycarbonate with a reflective metallic layer. This layer is coated with metallic acrylic plastic. This metal is aluminum. In this layer, the data are stored using the laser light which reflects the coated layer for reading and writing the data.
- The data is read in the form of pits, each pit is of 0.83-micrometre and the data is arranged as spiral track from the disc's inner hole to its outer edge, because the CD is of circular shape.
- The hole is in the centre of the CD, which diameter is 15mm.
- The area closest to the hole is known as the clamping area, no data is stored in this area because there is no metallic layer. This area is nearly equal to 26 mm to 33 mm in radius.
- The radius of the usable area, that is where the data can be store is of 38mm.

Types of Compact Disks

There are three types of CDs available:

- **CD-R :** CD-R full form is Compact Disc – Recordable. This type of compact disc can be written only once and can not erased.
- **CD-ROM :** CD-ROM stands for Compact Disk-Read Only Memory. This disks are read once, after read it is use as a ROM, that is cannot be updated later.
- **CD-RW :** CD-RW full form is Compact Disc-ReWritable. This type of compact disc can be written multiple times and can be erased also, like Pendrive.

Advantages of Compact Disk

- **Portable:** CDs are more compact and lightweight, they are easier to store and travel.
- **Reliable:** In that time, an entire software can be stored on one CD, so its very reliable for the software industries in the days.
- **Multiple Applications:** It is also adaptable. The higher capacity of the compact disc was exploited for uses other than storing digital audio. CDs became a popular media for distributing home films, software packages, and other digital content.
- **Random Access:** CD provides random data access. Users can use this random access to choose music tracks, specific files or data, or explore a menu via a user interface.
- **Rewritable Formats:** Another benefit of compact discs is the availability of rewritable versions such as CD-R and CD-RW.

Disadvantages of Compact Disk

- **Inferior Capacity:** CDs have more storage capacity than their predecessors, but subsequent storage mediums have more capacity. Storage capacity is lower than a hard drive or DVD, now a days CD is not used at all.

VPMP POLYTECHNIC

- **Older Technology:** A compact disc's limitation stems from its older read and write mechanism technology, which is based on 780nm wavelength.
- **Inferior Quality:** It should be noted that audio-video files with higher audio and video quality can be stored on DVDs and Blu-ray Discs.
- **Durability Issues:** Magnetic tapes are less durable than CDs. However, it is still fragile because it is easily scratched if not treated carefully. When exposed to severe heat and humidity, it might deform and become unusable.
- **Obsolete Medium:** Another issue of CDs is that they have become obsolete as better storage methods have become available.
- It's also worth noting that compact discs aren't suitable for backup storage because of their limited storage capacity, susceptibility to breakage, and obsolescence. It is preferable to use hard drives or solid-state drives

❖ DVD(Digital Video Disk):

- **DVD** stands for Digital Versatile Disc. It is commonly known as Digital Video Disc.
- It is a digital optical disc storage format used to store high-capacity data like high-quality videos and movies.
- It is also used to store the operating system.
- It was invented and developed by four companies named Philips, Sony, Toshiba, and Panasonic in 1995.
- DVDs provide higher storage capacity than CDs(compact discs) and can be played in multiple types of players like DVD players.
- DVD technology allows for the storage of a large amount of data using digital technology. DVDs can store up to 17 gigabytes, compared to the storage capacity of a compact disc (CD).

VPMP POLYTECHNIC

DVD Storage Capacity

On the basis of storage capacity, DVDs can be divided into four types.

No.	Type	Storage capacity
1)	Single-sided, Single layer	4.7 GB
2)	Single-sided, Double layer	8.5 GB to 8.7 GB
3)	Double-sided, Single layer	9.4 GB
4)	Double-sided, Double layer	17.08 GB

Physical measurements of a DVD

A DVD comes in two dimensions.

12 cm (120 mm): It is the most common size and is generally used for storing software, movies, operating system, etc.

8 cm (80 mm): This size of DVD is generally used for small devices like portable music players and video cameras etc.

Brief History

Initially, the DVD was developed as a substitute for VHS tapes, but soon they became popular as a data storage device. In 1972, the audio CD was developed as a medium of entertainment. In 1993, two video disc formats were being developed, the Multimedia Compact Disc (MMCD) and the Super Density (SD) disc. In 1997, DVD took over CD as a medium of entertainment and data storage. Twister was the first movie put on DVD on 25 March 1996.

Types

On the basis of applications, a DVD can be categorized in different ways as described below:

- **DVD-ROM:** It can only be used for reading and cannot be written.

- **DVD-R:** It can be used to record any type of data.
- **DVD-RW:** It can be read, written, erased, and rewritten.

Advantages

- Very large storage capacity.
- Increasing availability.
- It is easily available in every store.
- It is portable.
- High data stability.
- The DVD drive can read CDs.
- DVDs are now mass-produced in order that they are relatively cheap.
- Sound and movie quality is superb which makes them suitable for sound and video.
- Price is dropping for both DVDs also as for the DVD drives.
- DVD has the capacity to offer 4k resolution.

Disadvantages of DVD

- DVDs don't add CD ROM drives.
- It is tough to vary data.
- There is no single standard on DVD.
- When we need to use DVD, it's built-in copy protection and regional lockout.
- Still a comparatively new technology so still expensive compared to CD-ROMs and VCR.
- It require a burning software to record some information thereto .
- DVD uses digital compression. poorly compressed audio or video could also be like fuzzy, harsh or vague and blocky.
- DVD doesn't fully support HDTV.
- They can be easily damaged by breaking or by a number of the scratching.
- Some DVD players and drives can't read CDs.
- View a couple of players can play in reverse at normal speed.

VPMP POLYTECHNIC

- Variations and options like DVD audio, DVD-VR and DTS audio tracks aren't supported by all players.
- Many of the DVD players and drives can't read DVD-RAM discs
- Large storage capacity, e.g., 4.7 to 9 Gb
- Excellent sound and picture quality, so best option to store videos and audio
- They are relatively cheap as they are mass-produced
- Information can be stored on both sides of a DVD, unlike a CD.

What distinguishes DVDs and CDs from one another?

The appearance of a DVD and CD is the same. The data is read by a laser on both the labelled and unmarked sides of the identically sized discs. The same-sized disc may carry more data than a CD thanks to DVD technology, as was indicated in the introduction

❖ USB(Universal Serial Bus):

- Universal Serial Bus (USB) is an industry standard that establishes specifications for connectors, cables, and protocols for communication, connection, and power supply between personal computers and their peripheral devices.
- USB, or universal serial bus, is a mechanism used to connect peripheral devices to computers. Before the advent of USB technology, a PC typically included one or two serial connections, a parallel port, keyboard and mouse connectors, and in some instances, a joystick port.
- The USB standard was established in the mid-1990s by a number of American companies, notably IBM, Intel, and Microsoft Corporation, as a more straightforward way to connect computer peripherals. The port provided a standard method for connecting various devices and offered considerable speed advantages over other alternatives.

There have been 3 generations of USB specifications:

- USB 1.x
- USB 2.0
- USB 3.x

The first USB was formulated in the mid-1990s. USB 1.1 was announced in 1995 and released in 1996. It was too popular and grab the market till about the year 2000. In the duration of USB 1.1 Intel announced a USB host controller and Philips announced USB audio for isochronous communication with consumer electronics devices.

VPMP POLYTECHNIC

In April of 2000, USB 2.0 was announced. USB 2.0 has multiple updates and additions. The USB Implementer Forum (USB IF) currently maintains the USB standard and it was released in 1996.

USB Connector Types

USB connectors have different shapes and sizes. Most of the USB connectors are the standard USB, Mini-USB, and Micro-USB, which have two or more variations of connectors. Information on each type are shown below.

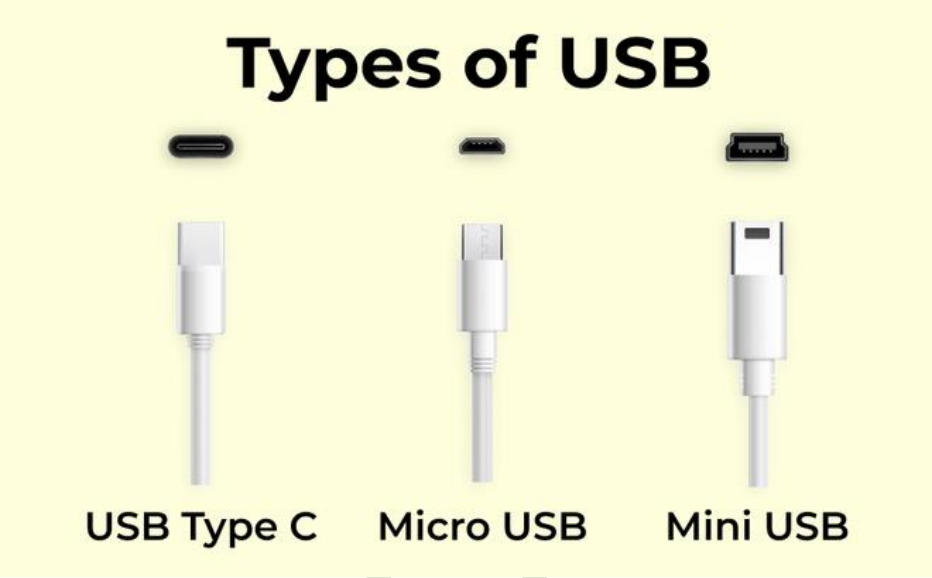

Mini USB

Mini USB is available in three different types A type, B type, and AB type. It is used with computer peripherals and digital cameras. The most common kind of interface is this one, that is referred to as mini B. Micro USB and USB-C cables basically take the place of mini USB on the latest devices. It uses coaxial cable to transmit data and power between two devices. it applies to mobile hard drives, digital cameras, and MP3 players. One end of a micro USB cable has a much smaller quadrilateral hub, and the other end has a regular USB hub with a flat head. It can be easily plugged into mobile devices. Although the tiny USB is mainly designed for, it can also be used to transfer data between computers having at least one USB port for charging device.

Micro USB

A reduced version of the USB (Universal Serial Bus), the micro-USB. It was created for connecting small and mobile devices including digital cameras, smartphones, GPS components, MP3 players, and photo printers and was first announced in 2007 as a replacement for mini USB.

The three different types of Micro-USB are Micro A, Micro B, and Micro USB 3. The connector size for the type Micro-A and Micro-B is 6.85 x 1.8 mm, while the Micro-A connector has a larger maximum overmild size. Because it has more pins on the side for twice as many wires than micro B, USB 3 micro is more comparable to micro B yet has faster speed. Micro USB and normal USB versions are both plug-and-play and hot-swappable is still widely used with electronic devices.

USB Type-C

A USB Type-C port is a relatively new type of connector that may be found on the majority of contemporary newer Android smartphones and other USB-connected devices. Data and power are delivered to computing machines using it. In contrast to traditional USB connections, USB-C cables can be connected into devices in either direction, including upside down.

USB Transfer Speeds

Since it is an external bus standard, USB 1.0 can accommodate up to 127 peripheral devices and data transfer rates of 12 Mbps.

The USB 2.0 standard, commonly referred to as high-speed USB, was created in 2001 by Philips, Lucent, Microsoft, Hewlett-Packard, Intel, NEC, and Compaq. It can support a transfer rate of 60 megabytes per second or more up to 480 Mbps.

USB 3.0, generally known as SuperSpeed USB 3.0, was made accessible for the first time by Buffalo Technology in November 2009. The enhanced functionality and speed of USB 3.0 contributed to advancements in power management, improved bandwidth capacity, and USB 2.0 technology.

Up to 5.0 gigabits per second (Gbps), or 640 megabytes per second, can be supported. After the release of USB 3.1, its name was changed to USB 3.1 Gen1 for manufacturing considerations. With the release of their Dell XPS and Inspiron computer series in April 2011, Dell began to roll out USB 3.0 connections.

The most recent version of the USB protocol commonly known as SuperSpeed, that was made available until July 31, 2013, is USB 3.1. It can support transfer rates of up to 10 Gbps. Recently, USB 3.0 and 3.1 revisions are used by different devices to improve speed and performance.

Advantages of USB

The Universal Serial Bus was designed to simplify and improve the interface between personal computers and peripheral devices when compared with previously existing standard or ad-hoc proprietary interfaces.

1. The USB interface is self-configuring. This means that the user need not adjust settings on the device and interface for speed or data format, or configure interrupts, input/output addresses, or direct memory access channels.

2. USB connectors are standardized at the host, so any peripheral can use any available receptacle. USB takes full advantage of the additional processing power that can be economically put into peripheral devices so that they can manage themselves. USB devices mostly do not have user-adjustable interface settings.

3. The USB interface is hot pluggable or plug and plays, meaning devices can be exchanged without rebooting the host computer. Small devices can be powered directly from the USB interface thus removing extra power supply cables.

VPMP POLYTECHNIC

4. The USB interface defines protocols for improving reliability over previous interfaces and recovery from common errors.

5. Installation of a device relying on the USB standard minimal operator action is required.

Disadvantages of USB

1. USB cables are limited in length.

2. USB has a strict tree topology and master-slave protocol for addressing peripheral devices. Peripheral devices cannot interact with one another except via the host, and two hosts cannot communicate over their USB ports directly.

3. Some very high-speed peripheral devices require sustained speeds not available in the USB standard.

4. For a product developer, the use of USB requires the implementation of a complex protocol and implies an intelligent controller in the peripheral device.

5. Use of the USB logos on the product requires annual fees and membership in the organization.

VPMP POLYTECHNIC